DS2400N

DATALOGIC

IDENTIFICATION

The DS2400N is a compact laser scanner offering improved reading performance, excellent flexibility and full on-board connectivity options with PROFINET, EtherNet/IP and Ethernet TCP/IP protocols.
The versatile DS2400N scanner is purpose-built for automatic warehousing and factory automation applications. The DS2400N combines best in class optics with the next generation of code reconstruction algorithms, delivering superior performance on low quality codes or damaged labels.
With on-board Ethernet ports and switch capability, the DS2400N can be networked into PROFINET line or ring topologies for system redundancy.
With EDS-AOP setup tools, configuring the EtherNet/IP fieldbus communication is simple and easy.
Through PROFINET, the DS2400N can be configured via the modular structure contained in the GSDML file. Parameters are stored in the GSDML file, providing automatic configuration for failed or replaced devices.
Thanks to an innovative rotating connector block, the DS2400N minimizes its mechanical dimensions offering a flexible form factor during installation.
Embedding switches, dual PROFINET parts, and a rotating connector block are a few of the unique features that define the Datalogic DS2x00N family.
Innovative software features provide easy and simple scanner installation and replacement.



Ethernet Switch | Rotating connector | PROFINET | EtherNet/IP | Ease of use | ACR

HIGHLIGHTS

- Embedded Ethernet connectivity
- Two PROFINET Ports
- Embedded Ethernet Switch
- Line topology
- Rotating connector block
- Compact dimensions
- Installation flexibility and optimum form factor
- ACR: Advanced Code Reconstruction
- Excellent performance on low quality and damaged labels
- Up to a 600 mm (23.6 in) reading distance

APPLICATIONS

- Automatic warehouses
- Factory automation
- Automatic picking systems
- Process control and packaging
- Print & apply systems

DS2400N

DATALOGIC

TECHNICAL DATA

INDUSTRIAL LASER BAR CODE SCANNERS	DS2400N-X2XX	DS2400N-X3XX	DS2400N-X4XX
Reading Distance (Min / Max)	70 - 600 mm (2.76 - 23.62 in)		
Max Resolution	up to 0.12mm (5 mils)		
Scan Rate	500 - 1000 scans/s		
Scan Pattern Type	Linear / Raster		
Aperture Angle	60 degrees		
Multilabel Reading	Up to 10 Codes in the same reading phase		
Reconstruction Code Technology	ACR Advanced Code Reconstruction		
Readable Codes	Code I2of5, Code39, Code93, Code128, EAN/UPC, EAN128, Codabar, Pharmacode, Plessey, ISBT128		
Case Material	Aluminum		
Dimensions (Typical Value)	84 x 68 x 34 mm (3.3 x 2.7 x 1.3 in)	104 x 69 x 38 mm (4.1 x 2.7 x 1.5 in)	104 x 86 x 38 mm (4.1 x 3.4 x 1.5 in)
Weight	330g (11.64 oz)	281 g (10 oz.)	308 g (10.9 oz.)
Temperature Range	0° - 45 °C (32 - 113 °F)		
Voltage Supply/Power Consumption	10-30 VDC; 4 W (average)		
IP Rating	IP65		
Embedded Communication Interfaces	Main port RS232/RS422/RS485 Auxiliary port RS232 ID-NET RS485 multidrop	EtherNet/IP , Ethernet TCP/IP Main port RS232/RS422/RS485 Auxiliary port RS232 ID-NET RS485 multidrop	PROFINET , Ethernet TCP/IP
Digital Inputs	2 Input (optocoupled, NPN/PNP)	2 Input (optocoupled, NPN/PNP)	Not Applicable / via PROFINET Fieldbus
Digital Outputs	2 Outputs (optocoupled)	2 Outputs (non-optocoupled)	Not Applicable / via PROFINET Fieldbus
Id-Net™ Interface	✓		
Fieldbus	✓ with CBX , QLM external devices	Embedded Ethernet-IP / compatible with CBX , QLM external devices	Embedded Profinet with internal switch (2 Ports)
Ethernet	✓ with CBX , QLM external devices	Embedded Ethernet TCP-IP / compatible with CBX , QLM external devices	Embedded PROFINET with internal switch (2 Ports)
Xpress Interface™	✓		
Device Programming	Genius™ (Windows™ based) SW		

ACCESSORIES

ACCESSORY	DESCRIPTION	PN
OM2000N	Oscillating Mirror	93ACC1783
GFC-200	85° Contact Reading Mirror	93A201108
GFC-2100	2KN 90° Lateral Output Window	93A201000
GFC-2020	102° Lateral Output Mirror	93ACC1871

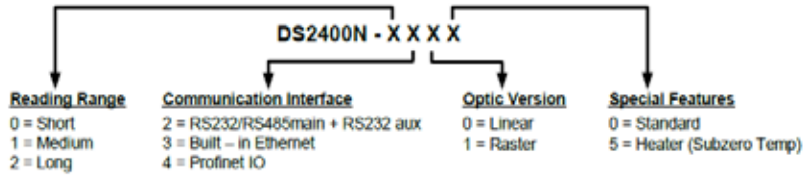

DIMENSIONS

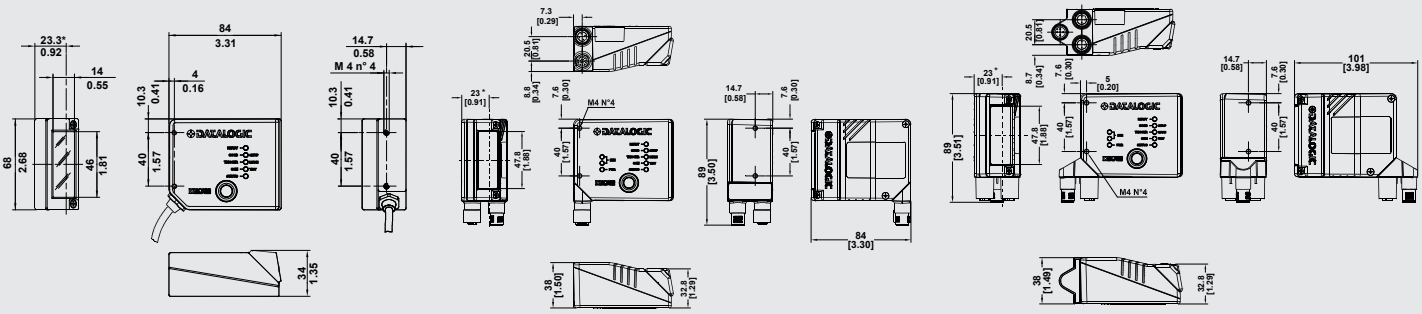

READING DIAGRAMS

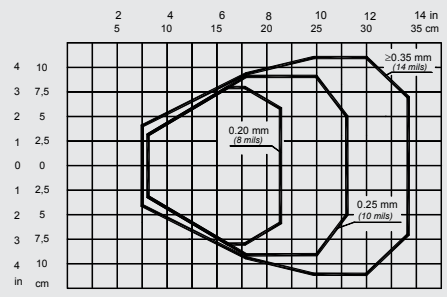

DS2400N-0X0X (Short Reading Range)

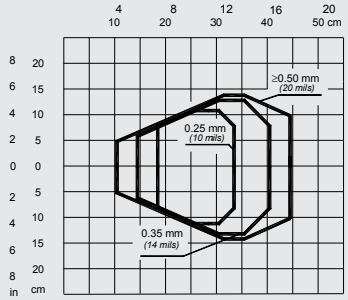

DS2400N-1X0X (Medium Reading Range)

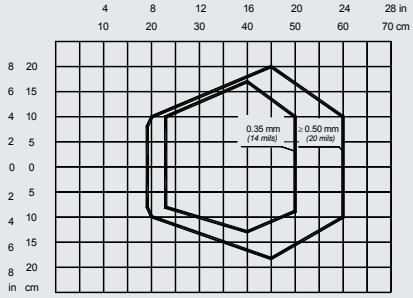

DS2400N-2X0X (Long Reading Range)

CE

Rev. 02, 11/2014

www.datalogic.com

The company endeavours to continuously improve and renew its products; for this reason the technical data and contents of this catalogue may undergo variations without prior notice. For correct installation and use, the company can guarantee only the data indicated in the instruction manual supplied with the products. Product and Company names and logos referenced may be either trademarks or registered trademarks of their respective companies. We reserve the right to make modifications and improvements.
*Subzero models are not available for offer, sale or distribution in Germany.