DATASENSING
easing automation challenges

NEW!

IP67

P3x

SMART CAMERA



- qHD (960 x 540), 2MP (1920 x 1080) and 5MP (2560 x 1936) resolution imager options both available in monochrome and color
- Field interchangeable lenses, illuminators and filters
- Two embedded illuminator sizes: 14-LED compact and 36-LED high power both integrating TIR lenses to deliver maximum brightness onto the field of view available in 4 different colors (white, blue, red and IR)
- Lens options: Micro-video (6, 8, 12.5 and 17.5 mm) or C-Mount
- Innovative 360° software configurable visual feedback
- Top industrial grade: -10 to 50 °C / 14 to 122 °F operating temperature, IP65/67 rating
- Powered by IMPACT software suite with 100+ inspection tools
- Add-on licenses to run even the most advanced Datalogic algorithms

CE UKCA

CODE DESCRIPTION

	P3	2	M	-	0	0	0	-	0	0	0	-	ML
series	**P3**	Smart camera											
resolution	**0**	qHD (960 x 540 pixels)											
	2	2 MP (1920 x 1080 pixels)											
	5	5 MP (2560 x 1936 pixels)											
mono / color	**M**	Monochrome											
	C	Color											
imager type	**0**	qHD (960 x 540 pixels) color											
	1	qHD (960 x 540 pixels) mono											
	6	2 MP (1920 X 1080 pixels) color											
	7	2 MP (1920 X 1080 pixels) mono											
	8	5 MP (2560 x 1936 pixels) mono											
	9	5 MP (2560 x 1936 pixels) color											
lens mount type	**ML**	Micro Video lens											
	CM	C-Mount lens											

TECHNICAL SPECIFICATIONS

	P30C/*00-000-**	P32C/*00-000-**	P35C/*00-000-**
GENERAL DATA			
Storage	1 GB		
System Memory	380 MB		
DETECTION CAPABILITIES			
Resolution	960 x 540 pixels	1920 x 1080 pixels	2560x1920 pixels
Imager	1/2.8 " CMOS		1/1.8 " CMOS
Mono / Color	Color		
Pixel size	5.6 µm	2.8 µm	
Shutter	Global		
INPUT/OUTPUT			
I/O	2 IN / 3 OUT		
COMMUNICATION			
Comm. Connectivity	Supports EtherNet/IP, Profinet, Modbus TCP		
Serial Communications	1x RS-232 serial port		
Network Interface	1000 Mbit/s Ethernet		
MECHANICAL DATA			
Material	Aluminum (housing) and plastic (front head)		
ENVIRONMENTAL DATA			
Operating Temperature	-10 ... 50 °C		
Mechanical Protection	IP65 / IP67		
Shocks and vibrations	Vibration IEC 60068-2-6 / Shock IEC 60068-2-27		

	P30M/*00-000-**	P32M/*00-000-**	P35M/*00-000-**
GENERAL DATA			
Storage	1 GB		
System Memory	380 MB		
DETECTION CAPABILITIES			
Resolution	960 x 540 pixels	1920 x 1080 pixels	2560x1920 pixels
Imager	1/2.8 " CMOS		1/1.8 " CMOS
Mono / Color	Monochrome		
Pixel size	5.6 µm	2.8 µm	
Shutter	Global		
INPUT/OUTPUT			
I/O	2 IN / 3 OUT		
COMMUNICATION			
Comm. Connectivity	Supports EtherNet/IP, Profinet, Modbus TCP		
Serial Communications	1x RS-232 serial port		
Network Interface	1000 Mbit/s Ethernet		
MECHANICAL DATA			
Material	Aluminum (housing) and plastic (front head)		
ENVIRONMENTAL DATA			
Operating Temperature	-10 ... 50 °C		
Mechanical Protection	IP65 / IP67		
Shocks and vibrations	Vibration IEC 60068-2-6 / Shock IEC 60068-2-27		

AVAILABLE MODELS

Resolution	Mono / Color	Frame rate (FPS)	Model
960 x 540 pixels	Monochrome	120 fps	**P30M 100-000 CM** (937710038)
			P30M 100-000 ML (937710034)
	Color	30 fps	**P30C 000-000 CM** (937710039)
			P30C 000-000 ML (937710035)
1920 x 1080 pixels	Monochrome	60 fps	**P32M 700-000 CM** (937710040)
			P32M 700-000 ML (937710036)
	Color	30 fps	**P32C 600-000 CM** (937710041)
			P32C 600-000 ML (937710037)
2560 x 1936 pixels	Monochrome	26 fps	**P35M 800-000 CM** (937710032)
	Color	13 fps	**P35C 900-000 CM** (937710033)

MECHANICAL DRAWINGS

P3X-SERIES C-MOUNT (0° CONNECTION)

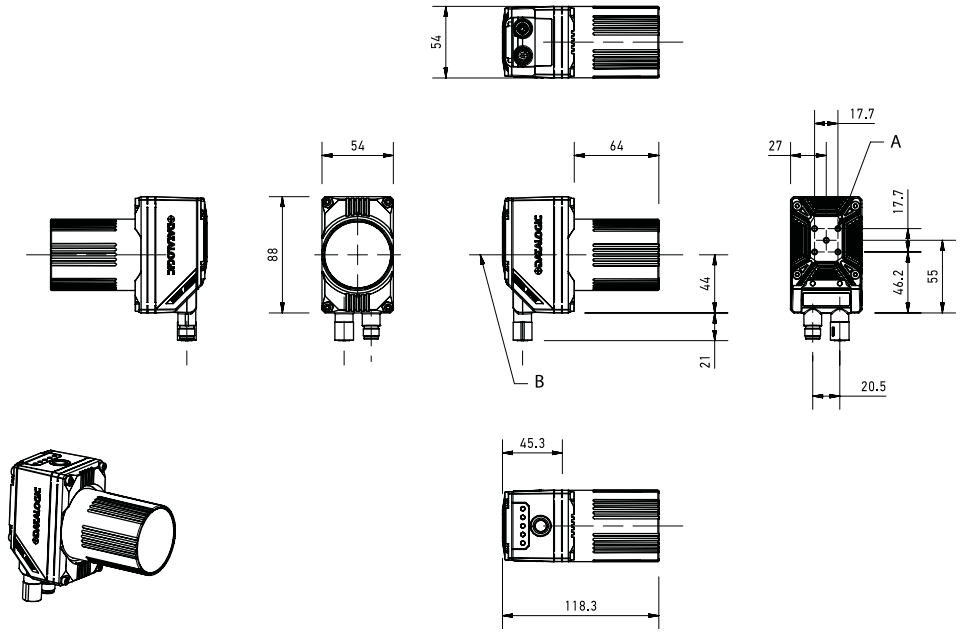

(mm)

Models	A	B
P3x CM long 0	5x M4 depth 7	Optical Axis

P3X-SERIES C-MOUNT (90° CONNECTION)

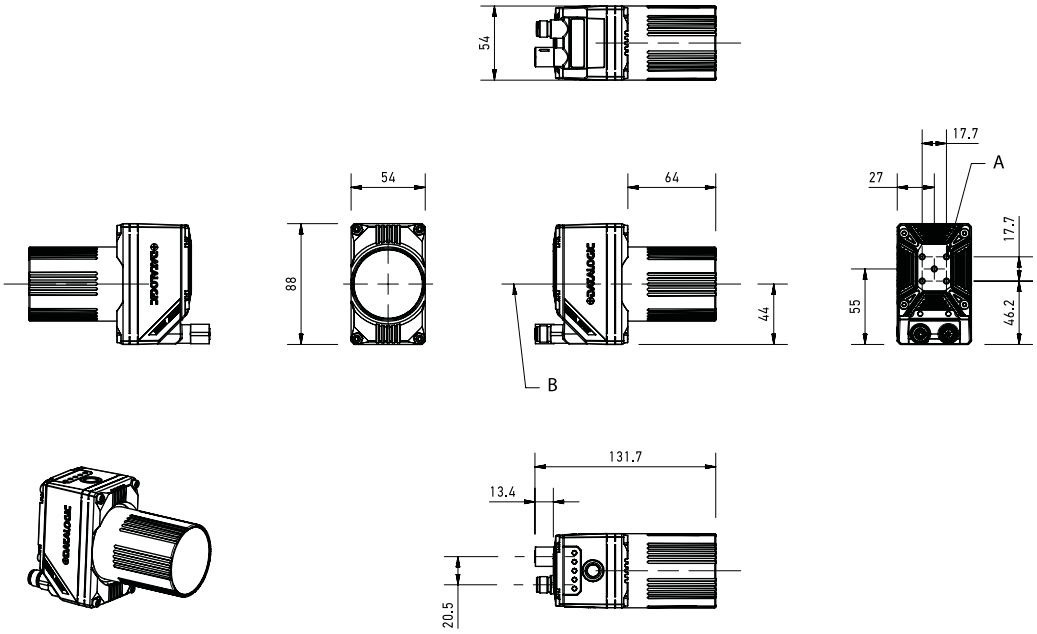

(mm)

Models	A	B
P3x CM long 90	5x M4 depth 7	Optical Axis

MECHANICAL DRAWINGS

P3X-SERIES C-MOUNT, COVER 36 LED (0° CONNECTION)

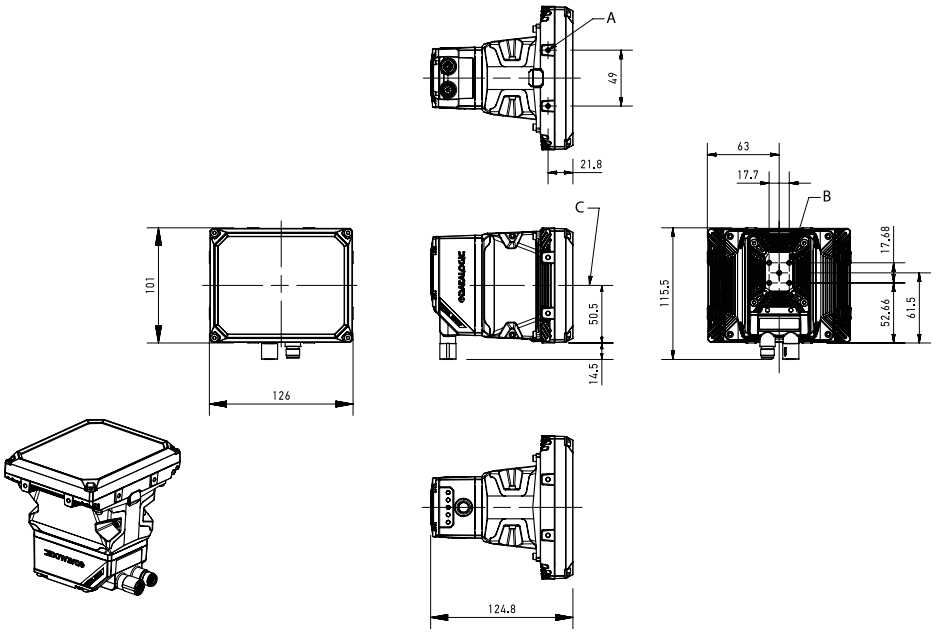

(mm)

Models	A	B	C
P3x/CM-36LED-0-LANDSCAPE	8x M4 Depth 7	5x M4 depth 7	Optical axis

P3X-SERIES C-MOUNT, COVER 36 LED (90° CONNECTION)

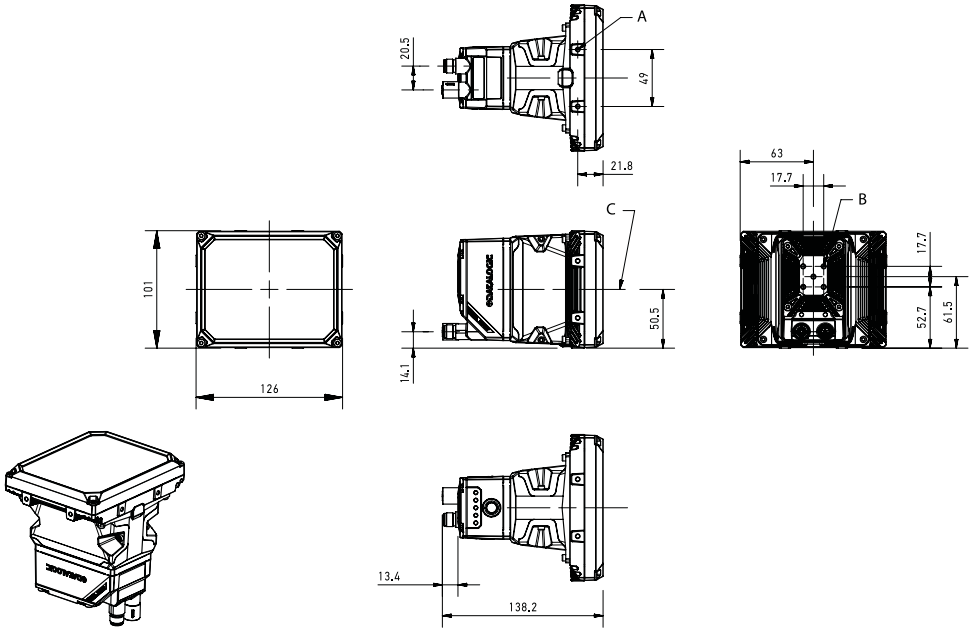

(mm)

Models	A	B	C
P3x/CM-36LED-90-LANDSCAPE	8x M4 Depth 7	5x M4 depth 7	Optical axis

MECHANICAL DRAWINGS

P3X-SERIES MICRO-VIDEO, COVER 14 LED (0° CONNECTION)

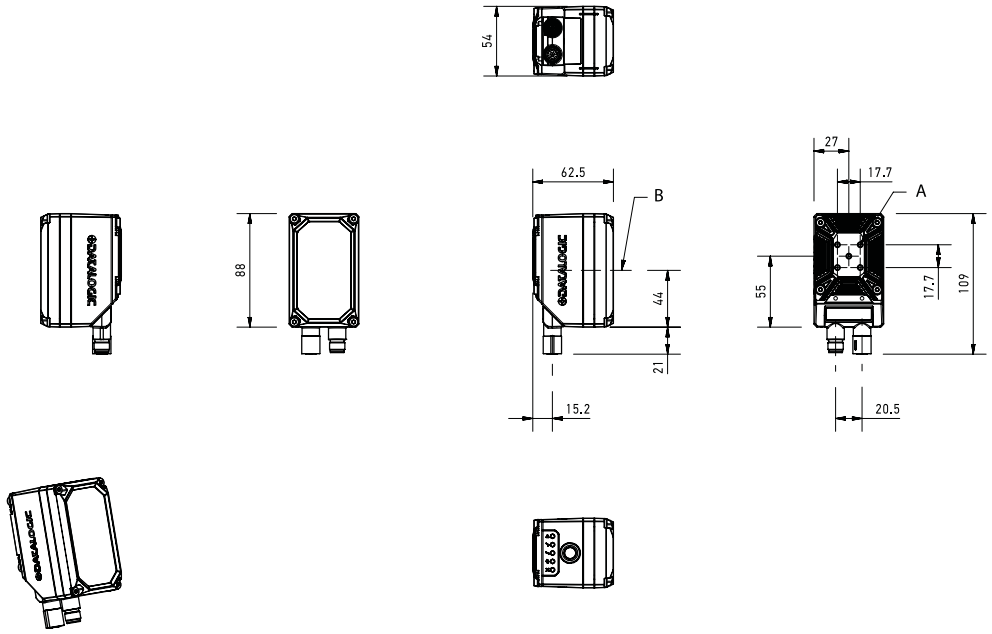

(mm)

Models	A	B
P3x ML 14 LED	Optical Axis	5x M4 depth 7

P3X-SERIES MICRO-VIDEO, COVER 14 LED (90° CONNECTION)

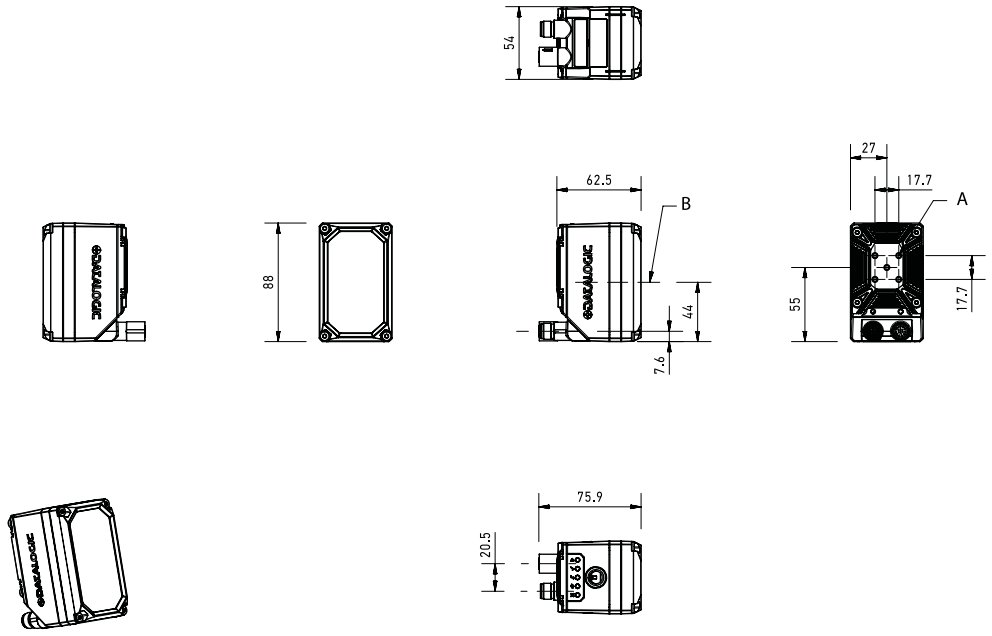

(mm)

Models	A	B
P3x ML 14led 90°	Optical Axis	5x M4 depth 7

MECHANICAL DRAWINGS

P3X-SERIES MICRO-VIDEO, COVER 36 LED (0° CONNECTION)

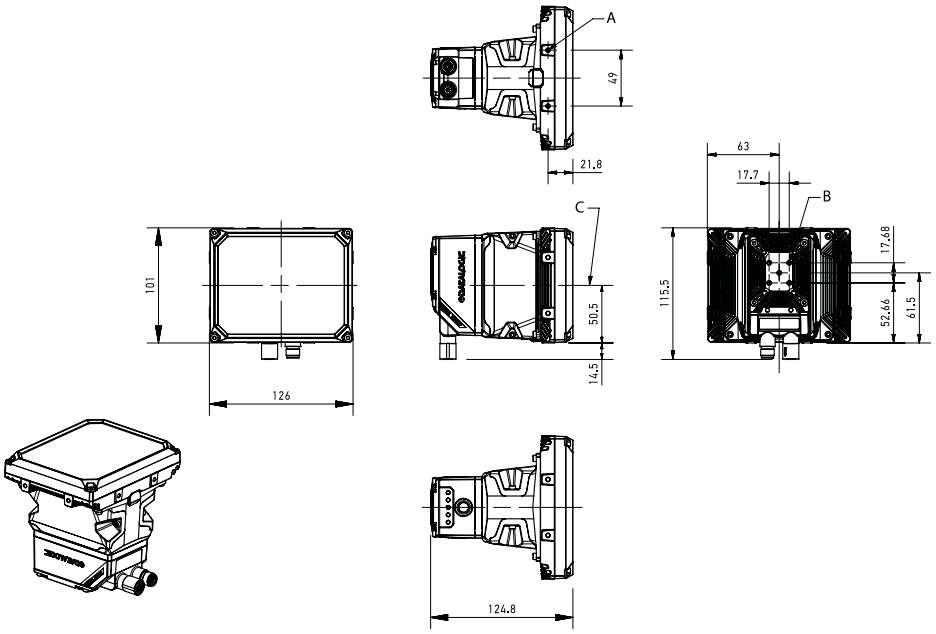

(mm)

Models	A	B	C
P3x/CM-36LED-0-LANDSCAPE	8x M4 Depth 7	5x M4 depth 7	Optical axis

P3X-SERIES MICRO-VIDEO, COVER 36 LED (90° CONNECTION)

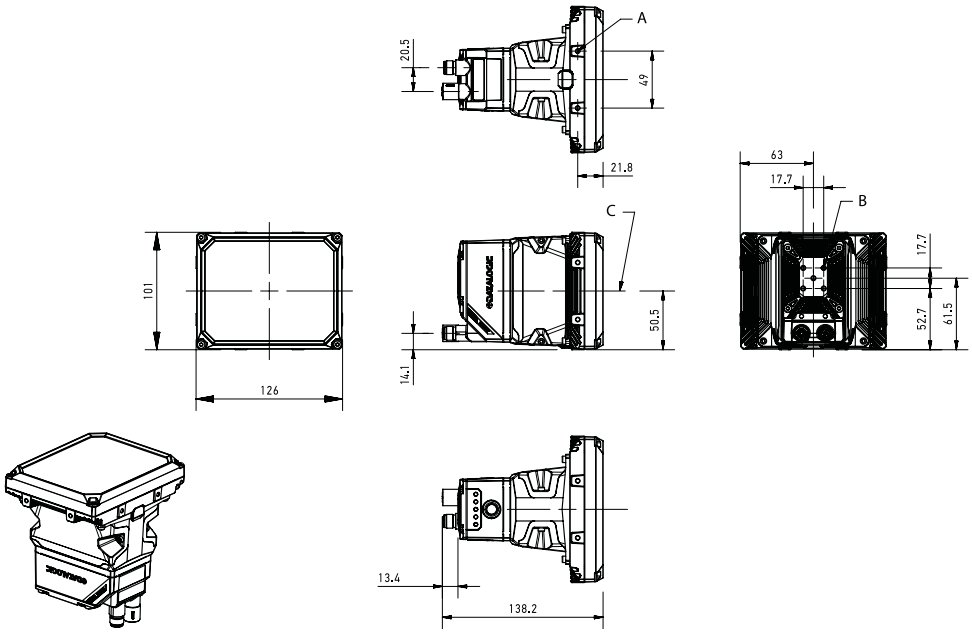

(mm)

Models	A	B	C
P3x/CM-36LED-90-LANDSCAPE	8x M4 Depth 7	5x M4 depth 7	Optical axis

DATASENSING
easing automation challenges

P3x

SMART CAMERA ACCESSORIES





- Wide range of illuminators
- Wide range of filters
- Wide range of covers
- Wide range of lenses

MICRO VIDEO LENSES

CE UKCA

P3X-SERIES FIELD OF VIEW qHD /2 MP (H x V in mm)				
				
operating distance (mm)	**6 mm**	**8 mm**	**12.5 mm**	**17.5 mm**
50	67 x 37	46 x 26	24 x 13	-
100	117 x 66	82 x 46	46 x 25	31 x 17
200	218 x 122	155 x 87	90 x 49	62 x 35
300	318 x 179	227 x 128	133 x 73	93 x 52
400	419 x 236	300 x 169	177 x 96	124 x 70
500	519 x 292	373 x 209	220 x 120	155 x 87
600	620 x 349	445 x 250	263 x 144	185 x 104
700	720 x 405	518 x 291	307 x 167	216 x 121
800	821 x 462	590 x 332	350 x 191	247 x 139
900	921 x 518	663 x 373	394 x 214	277 x 156
1000	1022 x 575	735 x 414	437 x 238	308 x 173
1100	-	808 x 454	480 x 262	339 x 190
1200	-	880 x 495	524 x 285	369 x 208
1300	-	-	567 x 309	400 x 225
1400	-	-	611 x 333	431 x 242
1500	-	-	654 x 357	461 x 259

CATEGORY	ORDER NR.	DESCRIPTION
Micro-Video Lenses	95A900010	LNP 601-040 ML 6 mm FF4 1/3"
	95A900011	LNP 603-040 ML 8 mm FF4 1/3"
	95A900012	LNP 606-040 ML 12.5 mm FF4 1/3"
	95A900013	LNP 608-040 ML 17.5 mm FF4 1/3"
	95A900014	LNP Micro Lens Kit M320/P2

C-MOUNT LENSES

P3X-SERIES FIELD OF VIEW qHD /2 MP (H in mm)



working distance (mm)	4 mm	6 mm	8 mm	12 mm	16 mm	25 mm	35 mm
50	121	81	67	47	-	-	-
100	188	126	100	69	-	-	-
200	323	216	167	114	89	55	39
300	457	305	234	159	123	77	54
400	591	395	302	203	156	98	69
500	726	484	369	248	190	120	85
600	860	574	436	293	233	141	100
700	995	664	503	338	257	163	115
800	1129	753	570	383	291	184	131
900	1263	843	638	427	324	206	146
1000	1398	932	705	472	358	227	162
1100	-	1022	772	517	391	249	177
1200	-	1112	839	562	425	270	192
1300	-	1201	906	606	459	292	208
1400	-	1291	974	651	492	313	223
1500	-	1380	1041	696	526	335	238
1600	-	-	-	741	559	356	254
1700	-	-	-	786	593	378	269
1800	-	-	-	830	627	399	284
1900	-	-	-	875	660	421	300
2000	-	-	-	920	694	442	315
2500	-	-	-	-	862	550	392

C-MOUNT LENSES

P3X-SERIES FIELD OF VIEW 5 MP (H in mm)



working distance (mm)	8 mm	12 mm	16 mm	25 mm	35 mm	50 mm
100	141	92	-	-	-	-
200	233	153	116	72	46	-
300	326	214	160	100	66	47
400	418	275	205	129	87	61
500	511	335	249	158	107	76
600	603	396	294	186	128	90
700	695	457	338	215	148	105
800	788	518	383	244	169	119
900	880	578	427	272	189	134
1000	973	639	472	301	210	148
1100	1065	700	516	330	230	163
1200	1157	761	561	358	251	177
1300	1250	821	605	387	271	192
1400	1342	882	650	415	292	206
1500	1435	943	694	444	312	221
1600	-	1004	739	473	333	236
1700	-	1064	783	501	353	250
1800	-	1125	828	530	374	265
1900	-	1186	872	559	394	279
2000	-	1247	917	587	415	294
2100	-	-	961	616	435	308
2200	-	-	1006	645	456	323
2300	-	-	1050	673	476	337
2400	-	-	1095	702	497	352
2500	-	-	1140	731	517	366

CATEGORY	ORDER NR.	DESCRIPTION
C-Mount Lenses	93ACC0285	LNM 000-021 CM 4 mm VF1.8 1/2" ED
	93ACC0286	LNM 001-031 CM 6 mm VF1.85 1/2" ED
	93ACC0287	LNM 003-021 CM 8 mm VF1.8 1/2.5" ED
	93ACC0288	LNM 005 021 CM 12 mm VF1.8 1/1.8" ED
	93ACC0289	LNM 007-021 CM 16 mm VF1.8 1/1.8" ED
	93ACC0290	LNM 009-021 CM 25 mm VF1.85 1/1.8" ED
	93ACC0292	LNM 010-021 CM 35 mmVF1.85 1/1.8" ED
	93ACC0343	LNM 011-012 CM 50 mm VF1.65 2/3" AZ

ILLUMINATORS



Blue **White** **Red** **Infrared**

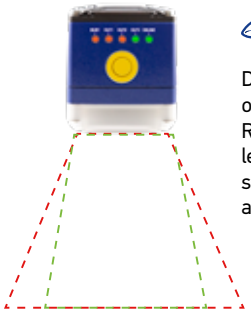

Different options of Total Internal Reflection (TIR) Led lenses to match smart camera lens aperture

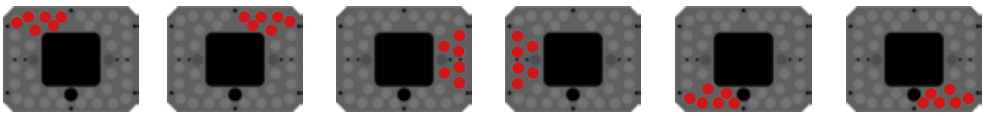

Software configurable lighting segments to optimize image brightness on the Field-of-View

CODE DESCRIPTION

LTP11 0 / 35 0

illuminator size	**0**	14 LED
	2	36 LED
LED lens aperture	**35**	35 degrees
	60	60 degrees
	90	90 degrees
color	**0**	red
	1	blue
	2	white
	3	infrared

CATEGORY	ORDER NR.	DESCRIPTION
Illuminators	95A900023	LTP 110-600 SN14L 60D RED 625 nm
	95A900026	LTP 110-350 SN14L 35D RED 625 nm
	95A900025	LTP 110-602 SN14L 60D BLU 475 nm
	95A900028	LTP 110-352 SN14L 35D BLU 475 nm
	95A900024	LTP 110-601 SN14L 60D WHT white
	95A900027	LTP 110-351 SN14L 35D WHT white
	95A900043	LTP 110-003 SN14L 90D IR 850nm NL
	95A900044	LTP 110-353 SN14L 35D IR 850 nm
	95A900045*	LTP 112-000 SN36L 120D RED 625nm NL
	95A900031*	LTP 112-600 SN36L 60D RED 625 nm
	95A900034*	LTP 112-350 SN36L 35D RED 625nm
	95A900047*	LTP 112-002 SN36L 120D BLU 475 nm NL
	95A900033*	LTP 112-602 SN36L 60D BLU 475 nm
	95A900036*	LTP 112-352 SN36L 35D BLU 475 nm
	95A900046*	LTP 112-001 SN36L 120D WHT white NL
	95A900032*	LTP 112-601 SN36L 60D WHT white
	95A900035*	LTP 112-351 SN36L 35D WHT white
	95A900048*	LTP 112-003 SN36L 90D IR 850 nm NL
	95A900049*	LTP 112-353 SN36L 35D IR 850 nm
	95A900038	Adapter LL ML LT 36L M320/P2
	95A900029	Adapter CM LT 36L P2

**Requires Adapter LL ML LT 36L M320/P2 (order no. 95A900038) when using Micro-Video lenses or Adapter CM LT 36L P2 (order no. 95A900029) when using C-Mount lenses*

COVERS

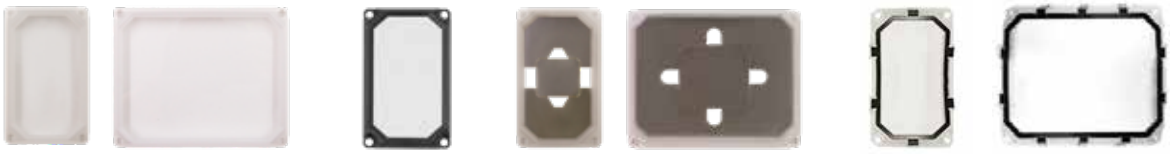

STANDARD ESD POLARIZED HARSH ENVIRONMENT

CATEGORY	ORDER NR.	DESCRIPTION
Covers	93ACC0271**	Cover STD LT 14L M320/P2/P3
	93ACC0273	Cover Polarizer LT 14L M320
	93ACC0272	Cover STD LT 36L M320/P2/P3
	93ACC0274	Cover Polarizer LT 36L M320/P2/P3
	93ACC0278	Cover ESD LT 14L M320
	93ACC0323	Cover LT 14L STS320/ATS320/P2/P3
	93ACC0324	Cover LT 36L STS320/ATS320/P2/P3
	937710025	C-Mount lens standard cover/P2/P3
	937710026	C-Mount lens long cover/P2/P3

FILTERS

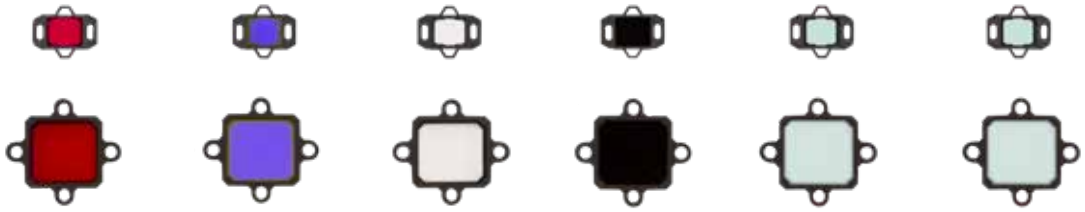

Red bandpass Blue bandpass UV-cut IR bandpass YAG-cut IR-cut

CATEGORY	ORDER NR.	DESCRIPTION
Filters	95A900018	Filter YAG Cut LT 14L M320/P2/P3
	95A900016	Filter BLU Bandpass 470 nm LT 14L M320/P2/P3
	95A900015	Filter RED Bandpass 635 nm LT 14L M320/P2/P3
	95A900017	Filter IR Bandpass 850 nm LT 14L M320/P2/P3
	95A900039	Filter UV Cut Longpass 415 LT 14L M320/P2/P3
	95A900064	Filter IR Cut LT 14L M320/P2/P3
	95A900022	Filter YAG Cut LT 36L M320/P2/P3
	95A900020	Filter BLU Bandpass 470 nm LT 36L M320/P2/P3
	95A900019	Filter RED Bandpass 635 nm LT 36L M320/P2/P3
	95A900021	Filter IR Bandpass 850 nm LT 36L M320/P2/P3
	95A900040	Filter UV Cut Longpass 415 LT 36L M320/P2/P3
	95A900065	Filter IR Cut LT 36L M320/P2/P3

LICENSES / BRACKETS / CABLES

CATEGORY	ORDER NR.	DESCRIPTION
Add-on Licenses	95A900008	LICENSE, ENHANCED, SMART CAMERA
	95A900009	LICENSE, PRO, SMART CAMERA
Brackets	93ACC0283	BK-32-010 SIDE FIX BRACKET M320/P2/P3
	93ACC0282**	BK-32-000 STD FIX BRACKET M320/P2/P3
Cables	93A050058	CAB-DS01-S M12-IP67 TO CBX 1m
	93A050059	CAB-DS03-S M12-IP67 TO CBX 3 m
	93A050060	CAB-DS05-S M12-IP67 TO CBX 5 m
	93A051390	CAB-DS10-S M12-IP67 TO CBX 10 m
	95A900061	CV-A1-30-F-05 M12 17p, Drag chain, 5 m
	95A900062	CV-A1-30-F-10 M12 17p, Drag chain, 10 m
	95A900063	CV-A1-30-F-15 M12 17p, Drag chain, 15 m
	93A050122	CAB-ETH-X-M01 M12-IP67 GETH-X CAB 1 m
	93A050123	CAB-ETH-X-M03 M12-IP67 GETH-X CAB 3 m
	93A050124	CAB-ETH-X-M05 M12-IP67 GETH-X CAB 5 m
	93A050140	CAB ETH-X-M10 M12-IP67 GETH-X CAB 10 m
	95A900058	CV-N1-48-F-05 GigETH-X, Drag chain, 5 m
	95A900059	CV-N1-48-F-10 GigETH-X, Drag chain, 10 m
	95A900060	CV-N1-48-F-15 GigETH-X, Drag chain, 15 m
	93A050128	CAB-ETH-X-RJ ADAPTER CAB GETH-X to RJ45
	93A050129	CAB-ETH-X-D ADAPTER CAB GETH-X to ETH-D

***Already included in the smart camera package.*