

DWM 1000-2000 SERIES

Technical Datasheet

Electromagnetic Flow Switch and Flow Meter

- For measuring electrically-conductive liquids, pastes and slurries
- Optional digital display
- No moving parts, maintenance-free

MEDITECNA
Instrumentación | Proyectos | Servicios

KROHNE

The electromagnetic flow controller

The DWM 1000 electromagnetic flow switch and the DWM 2000 electromagnetic flow meter monitor the flow of electrically-conductive liquids, pastes and slurries.

The DWM 1000 uses an induced voltage converted into a switching signal.

The DWM 2000 uses an induced voltage converted into a 4...20 mA current output that is proportional to the flow velocity.



1. Optional digital display or flashing LED
2. Mounting sleeve graduated with nominal diameter markings so that the sensor can be inserted correctly into the process pipe
3. Screw-on or hygienic process fitting (with or without optional spool piece)
4. Adjustable switching point (DWM 1000) or 4...20 mA output (DWM 2000)
5. Housing options: IP66 Aluminium or IP68 Stainless Steel

Highlights

- DIP switch for setting full-scale value
- Zero calibration button removes zero drift
- Long version available for pipes larger than 400 mm / 16" in diameter
- Optional ball valve for long version
- Rugged design, IP66 (NEMA 4/4X) protection
- IP 68 version available for immersed applications
- Suitable for process temperatures up to 150°C / -13...300°F and process pressures up to 25 bar / 360 psig
- Optional digital display for DWM 2000 meters
- Suitable for AC and DC electrical circuits (relays available for the DWM 1000)
- Optional spool pieces for pipe diameters DN25...50 or ½"...2"
- Optional fitting for Tuchenhagen VARIVENT® housings
- Housing is removable or rotatable under process conditions

Industries

- Petrochemical
- Oil & Gas
- Chemical
- Food & beverage
- Water
- Air conditioning (HVAC)

Applications

- Flow detection
- Cooling systems
- Pump protection

Variants



DWM 1000

The DWM 1000 flow switch is an insertion-type, two wire system. The switching point is adjustable over a full-scale range of 0.1...9.9 m/s or 0.3...32.5 ft/s. Amplifier relays are also available for a selection of AC and DC voltages.

A welding socket is supplied as standard for welding the DWM 1000 directly onto process pipes. It is suitable for pipe diameters DN50...400. An optional spool piece can be used to install the instrument without a welding operation.



DWM 2000

The DWM 2000 flow meter is an insertion-type instrument. Full scale range is a adjustable from 1...8 m/s or 3.3...26.2 ft/s.

The DWM 2000 has an optional liquid crystal display. Other display options are available.

A welding socket is supplied as standard for welding the DWM 2000 directly onto process pipes. It is suitable for pipe diameters DN50...400. An optional spool piece can be used to install the instrument without a welding operation.

Options



LCD Indicator

The DWM 2000 D flow meter is equipped with a two-line, 16-character LCD. It indicates flow velocity on the first line and flow rate on the second. It can also be used to calibrate the DWM 2000 onsite.

This can be retrofitted to all DWM 2000 variants, except those with the IP68 stainless steel housing option.



IP68 stainless steel housing

The IP68 stainless steel housing has been designed for immersed applications. It is a sealed unit and all calibration is carried out before delivery.

DWM 1000 and 2000 instruments with the IP68 stainless steel housing option can also be ordered with a long sensor.



Long sensor

The DWM 1000 L and 2000 L are ideal for flow control in large diameter pipes or open channels. They are a suitable alternative to insertion turbines. The sensor is either 500 mm / 20" or 1000 mm / 40" long: it can be supplied up to 3 m / 120" long on request. It has these additional features:

- Security chain
- Optional welding socket
- Optional isolation valve



Spooling piece

Spooling pieces are available for pipe diameters DN25...50 or 1...2". These have a standard length of 200 mm / 7.9".



FT Tuchenhagen connection

An option developed for hygienic applications.

Tuchenhagen VARIVENT® housings are supplied on demand with DWM 1000 FT and 2000 FT instruments.

Technical data

	DWM 1000	DWM 2000

Functions

Description	2-wire flow switch	Flow meter with 4...20 mA output
Function	For monitoring flow velocity in pipes or open channels	
User interface		
Options	None; Flashing LED	None; 2-line LCD indicator with 4-button keypad
Interface languages	-	English, French or German
Display units, 1st line	-	m/s
Display units, 2nd line (optional)	-	m^3/h

Measurement accuracy

Repeatability	±1% of the switching point	±1% of the measured value
Accuracy		
when v > 1 m/s or 3.3 ft/s	±5% of the switching point	±5% of the measured value (± 2% if calibrated onsite)
when v < 1 m/s or 3.3 ft/s	±3 cm/s / ±1.2 in./s ±2% of the switching point	±3 cm/s / ±1.2 in./s ±2% of the measured value
Reference temperature	+20°C ±5°C / +70°F ±10°F	
Reference pressure	1013 mbar abs. ±20 mbar / 14.69 psig ±0.29 psig	
Reference relative humidity	60% ±15%	
Full-scale range	0.1...9.9 m/s / 0.3...32.5 ft/s, adjustable threshold	1, 2, 3, 4, 5, 6, 7, or 8 m/s / 3.3, 6.6, 9.9,13.1, 16.4, 19.6, 22.9, or 26.2 ft/s, programmable
Hysteresis	8%, when flow velocity decreases	-

Operating conditions

Ambient temperature	-25...+60°C / -13...+140°F
Process temperature	
with any option except immersible device (IP68) option	-25...+150°C / -13...+300°F
with immersible device (IP68) option	-25...+60°C / -13...+140°F
Max. allowable operating pressure	25 bar / 360 psig
Electrical conductivity	≥20 µS/cm
Protection category acc. to EN 60529 / NEMA 250,	
standard variant	IP 66 / NEMA 4 - 4X
with FT option	IP 66 / NEMA 4 - 4X
with long sensor option	IP 66 / NEMA 4 - 4X
with immersible device (IP68) option	IP 68 / NEMA 6P
Electromagnetic compatibility (EMC),	
to CE	EN 50081-1; EN 50082-2
	89/336/EEC (EMC)
	72/73/EEC (Low Voltage Directive)

Installation conditions

Minimum inlet run	10 x nominal diameter, depending on the flow profile
Minimum outlet run	5 x nominal diameter, depending on the flow profile
Pipe material	Electrically conductive materials, refer to the handbook for other materials

Materials

Housing	
with any option except immersible device (IP68) option	Aluminium with epoxy finish
with immersible device (IP68) option	316 L (1.4404) stainless steel

	DWM 1000	DWM 2000
Sensor casing	316 L (1.4404) stainless steel	
Sensor insulation	Ceramic (Zirconium oxide)	
Welding sleeve for T-mounting	316 L (1.4404) stainless steel	
Spool piece (option)	316 L (1.4404) stainless steel	
Safety chain, for long sensor option	Zinc-plated steel	
Isolation valve (option)	Nickel-plated brass	
Tuchenhagen connection (option)	316 L (1.4404) stainless steel	
Cable entry	Nickel-plated brass	
Gasket, sensor	FKM / FPM	
Gasket, connection	Klingerit (without asbestos)	
Gasket, housing cover	Perbunan	
Gasket, Tuchenhagen connection (option)	EPDM	
Electrode	Platinum	

Process connections

with standard fitting	G 1A; Screw-on welding socket (Ø39 mm / 1.5") for process pipes DN50...400 / 2...16"
with long sensor (option)	G 1½; NPT 1½ Screw-on welding socket (Ø60 mm / 2.4")
with isolation valve (option)	G 1½, can be fitted with an optional welding socket (Ø60 mm / 2.4") or an NPT 1½ adaptor
with spool piece (option)	
flange, DIN 2526 - PN40 - Form C	DN25...50; DN32 on request
flange, ANSI B16.5 - 150 lbs RF	1...2"; 1¼" on request
flange, ANSI B16.5 - 300 lbs RF	1...2"; 1¼" on request

Power supply

Instrument terminal	48...250 VAC or VDC	12 / 24 VDC
Relay options for instrument terminal	230 / 110 / 48 VAC; 110 / 48 VDC	-
Power consumption	200 mA max.	50 mA max.
Protective earthing load (1)	<10 Ohms	
Cable entry	PG 13.5	
Cable tightening capacity	1.5 mm² or 16 AWG	
Time constant	5 / 8 / 10 s	5 s (2)

Input and output

Output signal	Adjustable threshold (3)	4...20 mA, passive

Options

Options	Spooling piece, see also "Process connections"	
	IP 68 stainless steel housing;	
	Long sensor, 500 mm / 20" length;	
	Long sensor, 1000 mm / 40" length (up to 3 m / 10 ft on request)	
	Welding socket	
	G 1½ isolation valve, for long sensor option	
	NPT 1½ process connection adapter, for G 1½ isolation valve	
	Relay	LCD indicator
	-	Digital indicator C 95/I with integrated counter
	-	HHC 2000 handheld display

(1) for Functional Earth (FE). Earthing is obligatory in the connection chamber
(2) sub-variant D or with HHC 2000 handheld display: 5 / 10 / 15 / 20 / 25 / 30 / 50 s
(3) break or make contact, switch selected.

Dimensions and Weight

Standard sub-variants

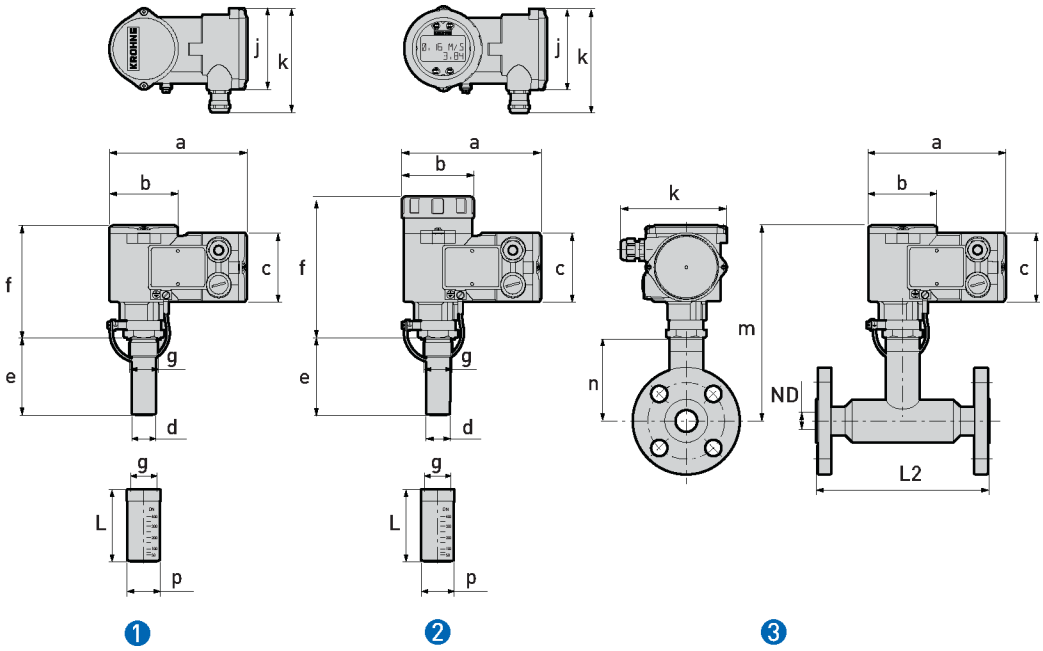

1 DWM 1000 or DWM 2000 with optional welding socket

2 DWM 2000 D (with LCD indicator) with optional welding socket

3 DWM 1000 or DWM 2000 with spool piece for inline connection

Note:

- PG13.5 cable glands are supplied as standard
- LCD indicators can be retrofitted to all DWM 2000s

Standard sub-variants without spool piece

Dimensions and Weight in mm and kg

	Dimensions [mm]											Weight [kg]
	a	b	c	d	e	f	g	j	k	L	p	
Without LCD indicator	160	80	80	Ø28	90	132	G1	95	122	86	Ø39 (1)	1.9
With LCD indicator	163	86	80	Ø28	90	164	G1	95	122	86	Ø39 (1)	2.4

(1) the tolerance is +0/-0.2

Dimensions and Weight in inches and lbs

	Dimensions [inches]											Weight [lbs]
	a	b	c	d	e	f	g	j	k	L	p	
Without LCD indicator	6.3	3.1	3.1	Ø1.1	3.5	5.2	G1	3.7	4.8	3.4	Ø1.5 (1)	4.2
With LCD indicator	6.4	3.4	3.1	Ø1.1	3.5	6.5	G1	3.7	4.8	3.4	Ø1.5 (1)	5.3

(1) the tolerance is +0/-0.008

Standard sub-variants with spool piece

Dimensions and Weight in mm and kg

	Dimensions [mm]								Weight [kg]
	ND	a	b	c	k	L2	m	n	
With spool piece, PN40	DN25…50	160	80	80	122	200	226	92	8.9
With spool piece, ANSI 150 lbs	1…2"	160	80	80	122	200	226	92	8.9
With spool piece, ANSI 300 lbs	1…2"	160	80	80	122	200	226	92	8.9

Dimensions and Weight in inches and lbs

	Dimensions [inches]								Weight [lbs]
	ND	a	b	c	k	L2	m	n	
With spool piece, PN40	DN25…50	6.3	3.1	3.1	4.8	7.9	8.9	3.6	29.2
With spool piece, ANSI 150 lbs	1…2"	6.3	3.1	3.1	4.8	7.9	8.9	3.6	29.2
With spool piece, ANSI 300 lbs	1…2"	6.3	3.1	3.1	4.8	7.9	8.9	3.6	29.2

Long sub-variants

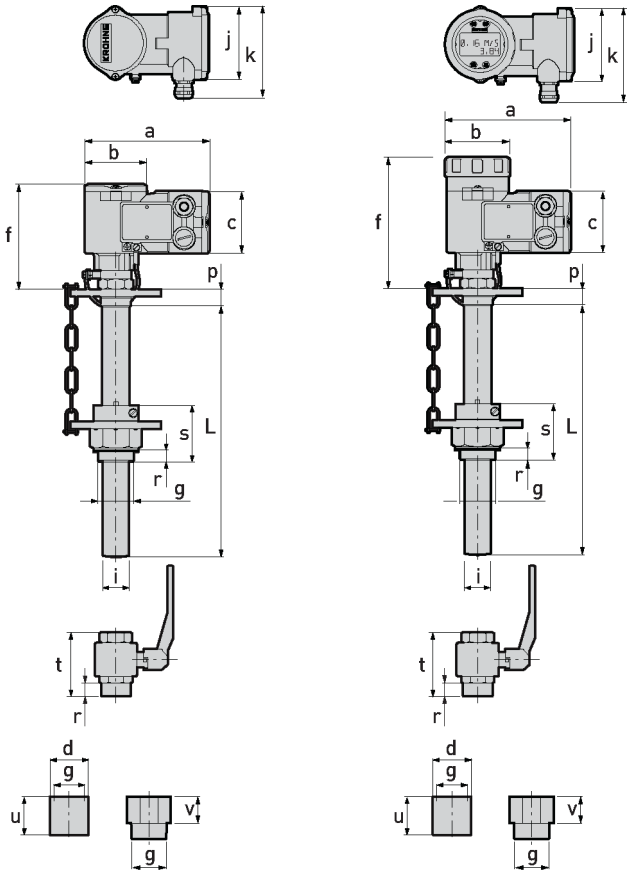

❶ ❷

❶ DWM 1000 L or DWM 2000 L with safety chain, optional G 1½ isolation valve and optional welding socket or NPT 1½ adaptor

❷ DWM 2000 L with LCD indicator, safety chain, optional G 1½ isolation valve and optional welding socket or NPT 1½ adaptor

Note:

- PG13.5 cable glands are supplied as standard
- A safety chain is supplied as standard with DWM 1000 L and DWM 2000 L instruments
- LCD indicators can be retrofitted to all DWM 2000s

Dimensions and Weight in mm and kg

	Dimensions [mm]																Weight [kg]
	a	b	c	d	f	g	i	j	k	L	p	r	s	t	u	v	
Without indicator	160	80	80	Ø60 ❶	132	❷	Ø28	95	122	❸	28	16	75	95	60	-	3.6
With LCD indicator	163	86	80	Ø60 ❶	164	❹	Ø28	95	122	❸	28	16	75	95	60	36	4.1

❶ Tolerance: +0/-0.2
❷ G 1½ or NPT 1½. A screw-on NPT 1½ adaptor is also available for the optional G 1½ isolation valve.
❸ Standard lengths are 500 or 1000 mm. Up to 3000 mm on request.
❹ G 1½ or NPT 1½. A screw-on NPT 1½ adaptor is also available for the optional G 1½ isolation valve.

Dimensions and Weight in inches and lbs

	Dimensions [inches]																Weight [lbs]
	a	b	c	d	f	g	i	j	k	L	p	r	s	t	u	v	
Without indicator	6.3	3.1	3.1	Ø2.4 ❶	5.2	❷	Ø1.1	3.7	4.8	❸	1.1	0.6	3.0	3.7	2.4	-	7.9
With LCD indicator	6.4	3.4	3.1	Ø2.4 ❶	6.5	❹	Ø1.1	3.7	4.8	❸	1.1	0.6	3.0	3.7	2.4	1.4	9.0

❶ Tolerance: +0/-0.008
❷ G 1½ or NPT 1½. A screw-on NPT 1½ adaptor is also available for the optional G 1½ isolation valve.
❸ Standard lengths are 20 or 40". Up to 120" on request.
❹ G 1½ or NPT 1½. A screw-on NPT 1½ adaptor is also available for the optional G 1½ isolation valve.

IP68 housing sub-variants

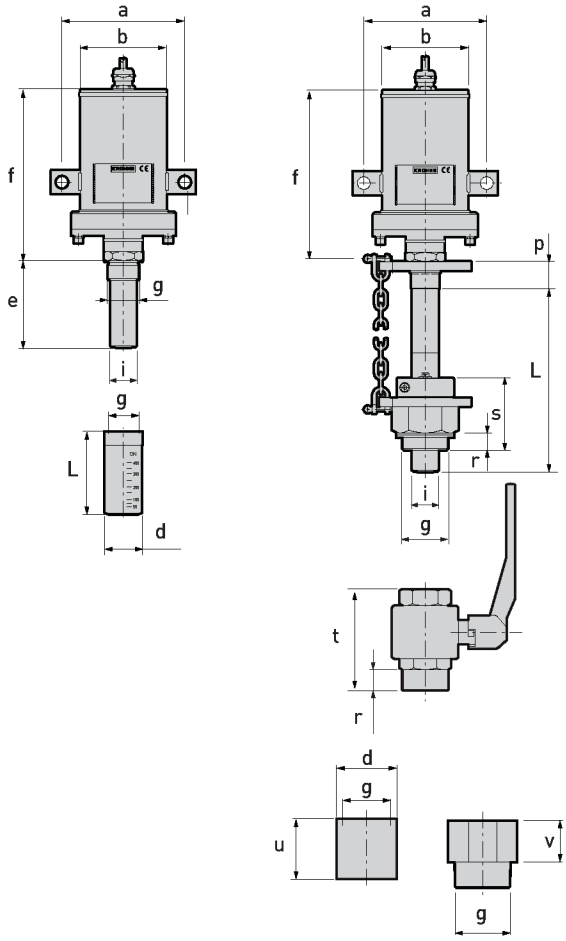

1 2

1 DWM 1000 IP68 or DWM 2000 IP68 with optional welding socket

2 DWM 1000 IP68 L or DWM 2000 IP68 L with optional G 1½ isolation valve and optional welding socket or NPT 1½ adaptor

Note:

- For immersed applications
- PG13.5 cable glands are supplied as standard
- A safety chain is supplied as standard with DWM 1000 L and DWM 2000 L instruments

Dimensions and Weight in mm and kg

	Dimensions [mm]														Weight [kg]
	a	b	d	e	f	g	i	L	p	r	s	t	u	v	
Standard variant	126	Ø89	Ø39 (1)	90	195	G 1	Ø28	86	-	-	-	-	-	-	5.7
Long variant	126	Ø89	Ø60 (1)	-	195	(2)	Ø28	(3)	28	16	75	95	60	36	8.4

(1) Tolerance: +0/-0.2
(2) G 1½ or NPT 1½. A screw-on NPT 1½ adaptor is also available for the optional G 1½ isolation valve.
(3) Standard lengths are 500 or 1000 mm. Up to 3000 mm on request.

Dimensions and Weight in inches and lbs

	Dimensions [inches]														Weight [lbs]
	a	b	d	e	f	g	i	L	p	r	s	t	u	v	
Standard variant	5.0	Ø3.5	Ø1.5 (1)	3.5	7.7	G 1	Ø1.1	3.4	-	-	-	-	-	-	12.6
Long variant	5.0	Ø3.5	Ø2.4 (1)	-	7.7	(2)	Ø1.1	(3)	1.1	0.6	3.0	3.7	2.4	1.4	18.5

(1) Tolerance: +0/-0.008
(2) G 1½ or NPT 1½. A screw-on NPT 1½ adaptor is also available for the optional G 1½ isolation valve.
(3) Standard lengths are 20 or 40". Up to 120" on request.

FT sub-variants

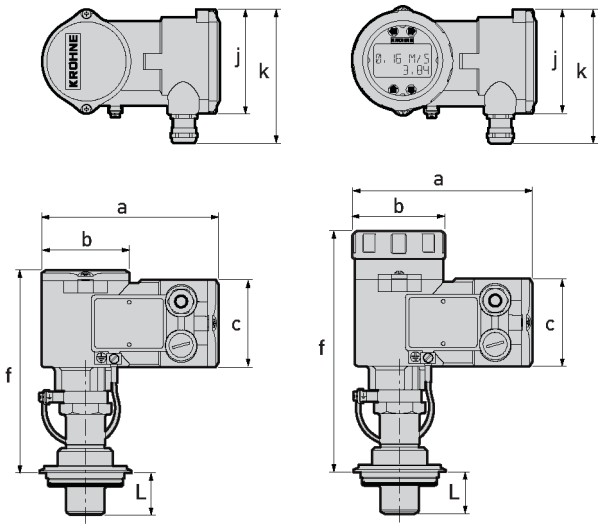

1 DWM 1000 FT or DWM 2000 FT with FT process connection for installation in Tuchenhagen VARIVENT® housings

2 DWM 2000 FT with LCD indicator and FT process connection for installation in Tuchenhagen VARIVENT® housings

Note:

- PG13.5 cable glands are supplied as standard
- LCD indicators can be retrofitted to all DWM 2000s

Dimensions and Weight in mm and kg

	Dimensions [mm]							Weight [kg]
	a	b	c	f	j	k	L	
Without LCD indicator	160	80	80	185	95	122	38	2.3
With LCD indicator	163	86	80	185	95	122	38	2.8

Dimensions and Weight in inches and lbs

	Dimensions [inches]							Weight [lbs]
	a	b	c	f	j	k	L	
Without LCD indicator	6.3	3.1	3.1	7.3	3.7	4.8	1.5	5.1
With LCD indicator	6.4	3.4	3.1	7.3	3.7	4.8	1.5	6.2

KROHNE Product Overview

- Electromagnetic flowmeters
- Variable area flowmeters
- Mass flowmeters
- Ultrasonic flowmeters
- Vortex flowmeters
- Flow controllers
- Level measuring instruments
- Pressure gauges
- Temperature measuring instruments
- Water solutions & analysis
- Oil and gas turnkey solutions

Addresses:

Germany

Northern sales office

KROHNE Messtechnik GmbH & Co. KG
Bremer Str. 133
D-21073 Hamburg
Phone:+49 (0)40 767 3340
Fax:+49 (0)40 767 33412
nord@krohne.de
ZIP code: 10000 - 29999, 49000 - 49999

Western and middle sales office

KROHNE Messtechnik GmbH & Co. KG
Ludwig-Krohne-Straße
D-47058 Duisburg
Phone:+49 (0)203 301 416
Fax:+49 (0)203 301 10416
west@krohne.de
ZIP code: 30000 - 34999, 37000 - 48000, 50000 - 53999, 57000 - 59999, 98000 - 99999

Southern sales office

KROHNE Messtechnik GmbH & Co. KG
Landsberger Str. 392
D-81241 Munich
Phone:+49 (0)89 121 5620
Fax:+49 (0)89 129 6190
sued@krohne.de
ZIP code: 0 - 9999, 80000 - 89999, 90000 - 97999

Southwestern sales office

KROHNE Messtechnik GmbH & Co. KG
Rüdesheimer Str. 40
D-65239 Hochheim/Main
Phone: +49(0)6146) 827 30
Fax:+49 (0)6146 827 312
rhein-main@krohne.de
ZIP code: 35000 - 36999, 54000 - 56999, 60000 - 79999

Instrumentation and control equipment catalog

TABLAR Messtechnik GmbH
Ludwig-Krohne-Straße 5
D-47058 Duisburg
Phone:+49 (0)2 03 305 880
Fax:+49 (0)2 03 305 8888
kontakt@tablar.de www.tablar.de

KROHNE sales companies

International

Australia
KROHNE Australia Pty Ltd
Quantum Business Park 10/287
Victoria Rd Rydalmere NSW 2116
Phone: +61 2 8846 1700
Fax: +61 2 8846 1755
krohne@krohne.com.au

Austria
KROHNE Austria Ges.m.b.H.
Modecenterstraße 14
A-1030 Vienna
Phone:+43 (0)1/203 45 32
Fax:+43 (0)1/203 47 78
info@krohne.at

Belgium
KROHNE Belgium N.V.
Brusselstraat 320
B-1702 Groot Bijgaarden
Phone:+32 (0)2 4 66 00 10
Fax:+32 (0)2 4 66 08 00
krohne@krohne.be

Brazil
KROHNE Conaut Controles Automaticos Ltda.
Estrada Das Águas Espraiadas, 230
C.P. 56 06835 - 080 EMBU - SP
Phone:+55 (0)11-4785-2700
Fax:+55 (0)11 4785-2768
conaut@conaut.com.br

China
KROHNE Measurement Instruments (Shanghai) Co. Ltd., (KMIC)
Room 1501
1033 Zhaojiabang Road
Shanghai 200030
Phone: +86 21 6487 9611
Fax:+86 21 6438 7110
info@krohne-asia.com

Czech Republic
Krohne CZ, spol. s r.o.
Sobisická 156
63800 Brno
Phone: +420 (0)545.242 627
Fax: +420 (0)545 220 093
brno@krohne.cz

France
KROHNE S.A.S.
Les Ors BP 98
F-26103 ROMANS Cedex
Phone:+33 (0)4 75 05 44 00
Fax:+33 (0)4 75 05 00 48
info@krohne.fr

Great Britain
KROHNE Ltd.
Rutherford Drive
Park Farm Industrial Estate
Wellingborough
Northants NN8 6AE
Phone:+44 (0)19 33 408 500
Fax:+44 (0)19 33 408 501
info@krohne.co.uk

CIS
Kanex KROHNE Engineering AG
Business-Centre Planeta
Office 404 ul.
Marxistskaja 3
109147 Moscow/Russia
Phone:+7 (0)095 911 7165
Fax:+7 (0)095 742 8873
krohne@dol.ru

India
Krohne Marshall Ltd.
A-34/35, M.I.D.C. Industrial Area,
H-Block
Pimpri Poona 411018
Phone:+91 (0)202 744 2020
Fax:+91 (0)202 744 2020
pcu@vsnl.net

Iran
KROHNE Liaison Office
North Sohrevardi Ave. 26,
Sarmad St., Apt. #9
Tehran 15539
Phone: +9821 8874 5973
Fax: +9821 8850 1268
krohne@krohneiran.com

Italy
KROHNE Italia Srl.
Via V. Monti 75
I-20145 Milan
Phone:+39 02 4300 661
Fax:+39 02 4300 6666
info@krohne.it

Korea
KROHNE Korea
Room 508 Miwon Bldg 43
Yoido-Dong Youngdeungpo-Ku
Seoul, Korea
Phone: 00-82-2-782-1900
Fax: 00-82-2-780-1749
krohnekorea@krohnekorea.com

Netherlands
KROHNE Nederland B.V.
Kerkeplaat 14
NL-3313 LC Dordrecht
Phone:+31 (0)78 630 6200
Fax:+31 (0)78 630 6405
Service Direct: +31 (0)78 630 6222
info@krohne.nl

Norway
KROHNE Norway A.S.
Ekholtveien 114
NO-1521 Moss
Phone:+47 (0)69 264 860
Fax:+47 (0)69 267 333
postmaster@krohne.no

Poland
KROHNE Polska Sp.z.o.o.
ul. Stary Rynek Oliwski 8a
80-324 Gdansk
Phone: +48 (0)58 520 9211
Fax.:+48 (0)58 520 9212
info@krohne.pl

Switzerland
KROHNE AG
Uferstr. 90
CH-4019 Basel
Phone:+41 (0)61 638 30 30
Fax:+41 (0)61 638 30 40
info@krohne.ch

Singapore
Tokyo Keiso - KROHNE (Singapore) Pte. Ltd.
14, International Business Park,
Jurong East
Chiyoda Building, #01-01/02
Singapore 609922
Phone: (65) 6567 4548
Fax : (65) 6567 9874
tks@tokyokeiso-krohne.com.sg

Republic of South Africa
KROHNE Pty. Ltd.
Bushbock Close
Corporate Park South
Midrand, Gauteng
P.O. Box 2069
Midrand, 1685
Phone: +27 (0)11 314 1391
Fax: +27 (0)11 314 1681
midrand@krohne.co.za

Spain
I.I. KROHNE IBERIA, S.r.l.
Polígono Industrial Nilo
Calle Brasil, nº. 5
28806 Alcalá de Henares Madrid
Phone: +34 (0)91 883 2152
Fax: +34 (0)91 883 4854
krohne@krohne.es

USA
KROHNE, Inc.
7 Dearborn Road
Peabody, MA 01960
Phone: +1 (800) FLOWING
Phone: +1 (978) 535 6060 (in MA)
info@krohne.com

Representatives

Algeria
Argentina
Cameroon
Canada
Chile
Columbia
Croatia
Denmark
Ecuador
Egypt
Finland
Gabon
Ghana
Greece
Hong Kong
Hungary
Indonesia
Iran
Ireland
Israel
Ivory Coast
Japan
Jordan
Kuwait
Libya
Lithuania
Malaysia
Mauritius
Mexico
Morocco
New Zealand
Peru
Portugal
Romania
Saudi Arabia
Senegal
Slovakia
Slovenia
Sweden
Taiwan
Thailand
Tunisia
Turkey
Venezuela
Yugoslavia

Other countries

KROHNE Messtechnik GmbH & Co. KG
Ludwig-Krohne-Str. 5
D-47058 Duisburg
Phone:+49 (0)203 301 0
Fax:+49 (0)203 301 389
export@krohne.de

© KROHNE 02/2007 4 0000488 01 Subject to change without notice

KROHNE